HS-5485HB General Specification.

Control System	PWM			-
Position Sensor Type	Contact Analog Potentiometer			-
Motor Type	Cored Metal Brush			At the Max voltage, it is recommended to be used only for a short time duration.
Operating Voltage Range	3.5 ~ 8.4V			
Voltage	4.8V	6.0V	-	
No Load Speed	0.20sec/60˚	0.17sec/60˚	-	At 25°C(±10%), 45%RH(±10%) measurement environment
Stall Torque	5.2kgf·cm (72.2 oz·in)	6.4kgf·cm (88.9 oz·in)	-	
Peak Efficiency Torque	1.0kgf·cm (13.9 oz·in)	1.3kgf·cm (18.1 oz·in)	-	
Standing Current	8mA	10mA	-	
No Load Running Current	150mA	170mA	-	
Stall Current	1,000mA	1,200mA	-	
Deadband	4μs	4μs	-	
Operating Travel	Default: ±60º, Programmable: Max 175º / Pulse Width: 900~2100μs(Center:1500μs)			
Continuous Rotation	n/a			
Operating Temperature Range	-20˚C ~ +60˚C (-4˚F ~+140˚F)			-
Storage Temperature Range	-30˚C ~ +80˚C (-22˚F ~+176˚F)			-
Connector Wire Length	300mm (11.811inch)			
Connector Wire Gauge	24AWG			
Dimensions	40.0mm x 20.0mm x 38.0mm (1.575inch x 0.787inch x 1.496inch)			General Tolerance ±0.1mm
Weight	45.0g (1.587oz)			Excluding the weight of Horn
Bearing Type	2 Ball Bearing			-
Case Material	Engineering Plastic			-
Gear Material	4 Heavy Duty Resin Gears			-
Gear Train Backlash	Max 0.5˚			-
Horn Gear Spline	24T(Ø6)			-
IP-Rating	IP54			-
Servo Amplifier Type	8bit Programmable Digital			-

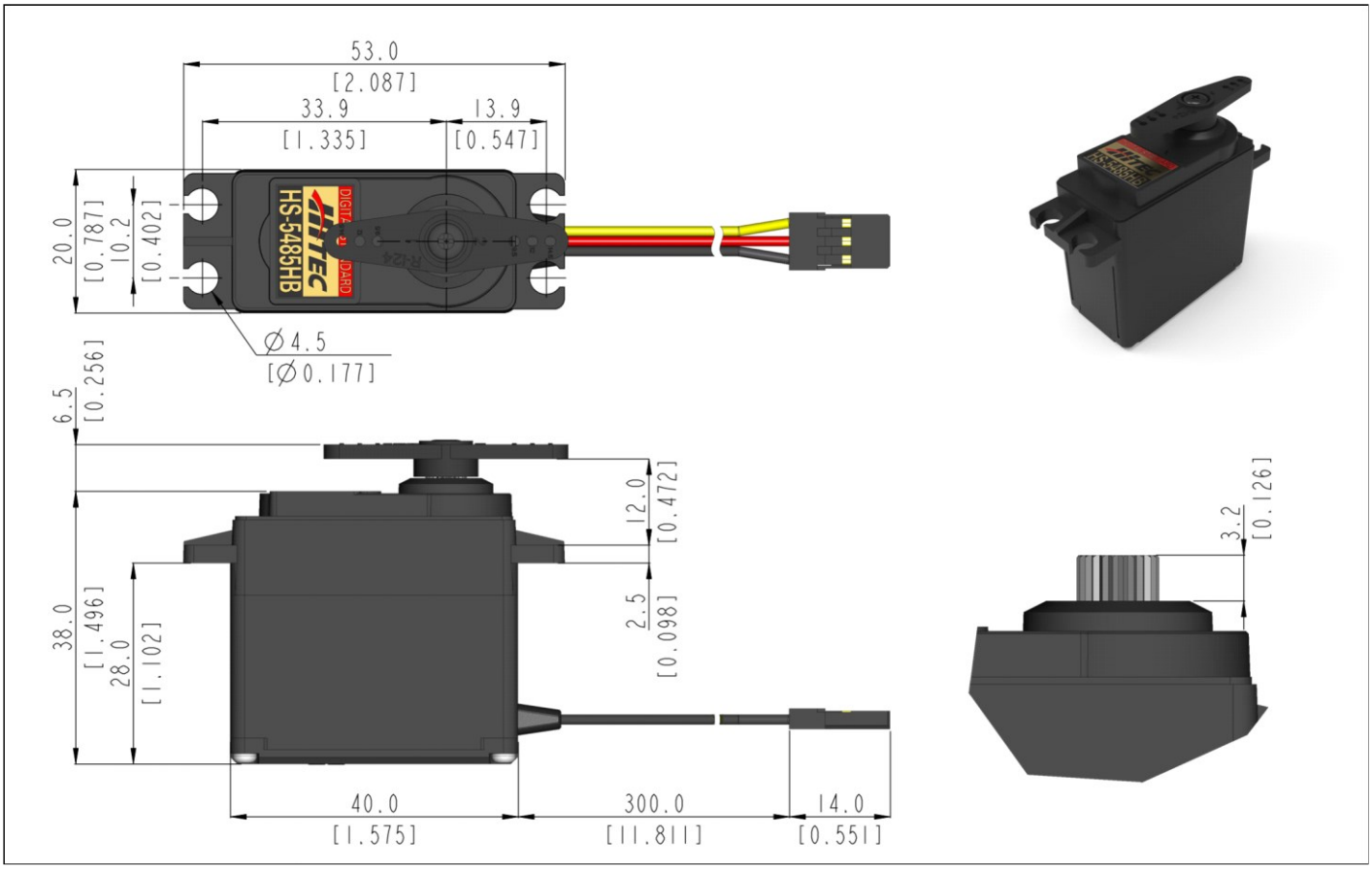

1:1 scale (Unit : mm[inch])

- **This product should not be used directly on the human body for medical purposes.**
- **This product should not be used for war weapons.**
- **All specifications are subject to change without notice.**