MD65MG General Specification.

Control System	PWM/TTL(Half Duplex)			-
Position Sensor Type	Contactless Magnetic Encoder			-
Motor Type	Cored Metal Brush			At the Max voltage, it is recommended to be used only for a short time duration.
Operating Voltage Range	3.5 ~ 8.4V			
Voltage	4.8V	6.0V	-	
No Load Speed	0.14sec/60˚	0.11sec/60˚	-	At 25°C(±10%), 45%RH(±10%) measurement environment
Stall Torque	1.8kgf·cm (25.0 oz·in)	2.2kgf·cm (30.55oz·in)	-	
Peak Efficiency Torque	0.4kgf·cm (5.55oz·in)	0.4kgf·cm (5.55oz·in)	-	
Standing Current	30mA	30mA	-	
No Load Running Current	180mA	220mA	-	
Stall Current	960mA	1,200mA	-	
Deadband	2μs	2μs	-	
Operating Travel	Default: ±60º, Programmable: Max 320º / Pulse Width: 900~2100μs(Center:1500μs)			-
Continuous Rotation	n/a			-
Operating Temperature Range	-20˚C ~ +60˚C (-4˚F ~+140˚F)			-
Storage Temperature Range	-30˚C ~ +80˚C (-22˚F ~+176˚F)			-
Connector Wire Length	160mm (6.299inch)			
Connector Wire Gauge	28AWG			
Dimensions	23.6mm x 11.6mm x 26.0mm (0.929inch x 0.457inch x 1.024inch)			General Tolerance ±0.1mm
Weight	11.5g (0.406oz)			Excluding the weight of Horn
Bearing Type	1 Ball Bearing			-
Case Material	Engineering Plastic			-
Gear Material	1 Heavy Duty Resin & 4 Metal Gears			-
Gear Train Backlash	Max 0.5˚			-
Horn Gear Spline	M25T(Ø5)			-
IP-Rating	IP4X			-
Servo Amplifier Type	32bit programmable Digital			-

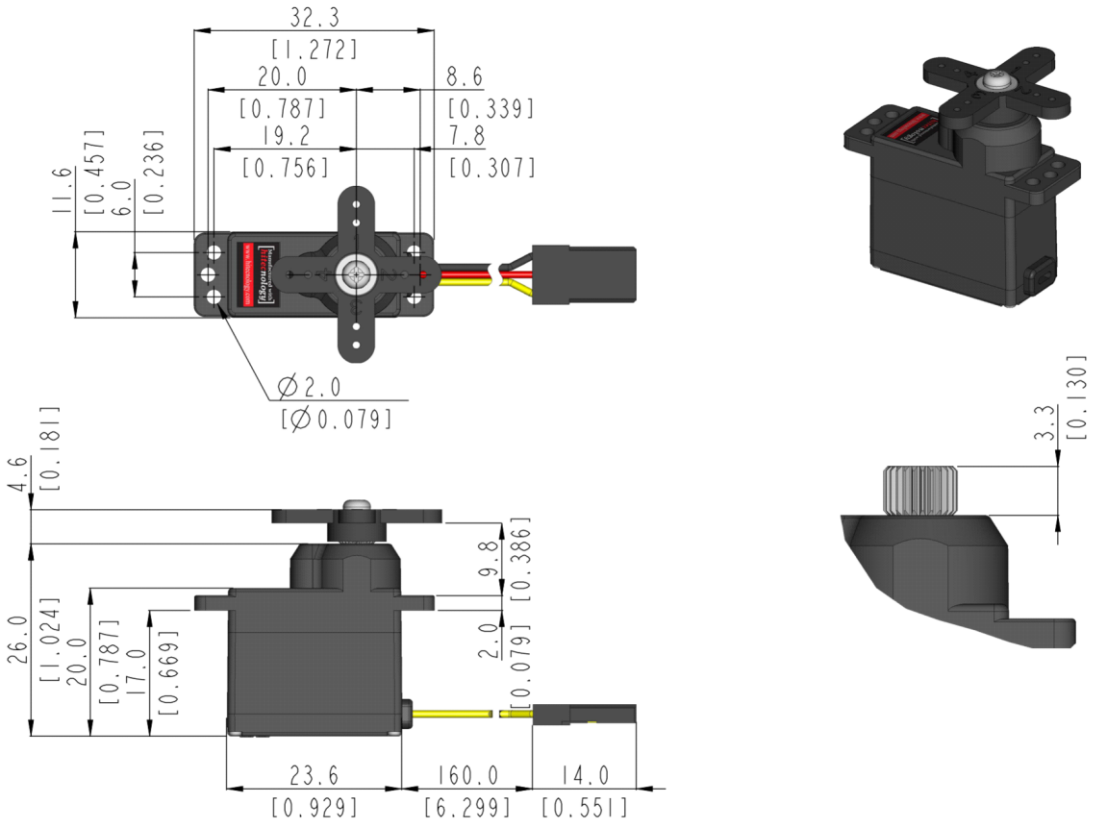

1:1 scale (Unit : mm[inch])

- **This product should not be used directly on the human body for medical purposes.**
- **This product should not be used for war weapons.**
- **All specifications are subject to change without notice.**
- **Be careful as strong magnetic fields may cause malfunction of the product.**